There are six problems in total. You must solve the first five, and problem 6 is optional.

Problem 1 (CO2): Converting Finite Automata to Regular Expressions (10 points)

Convert the following finite automata into an equivalent regular expression using the state elimination method. You must eliminate q_5 first, then q_4, then q_3, then q_1, and finally q_2. Show each step of the process.

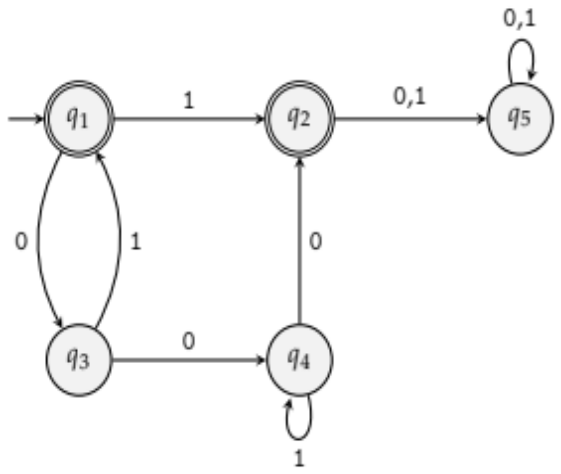

Problem 2 (CO5): Pumping Lemma (5 points)

Let $\Sigma = \{0, 1\}$. Consider the following language over Σ.

$$L = \{w = 0^n 1^{n+1} \text{ where } n \text{ is 1 more than multiple of 4}\}$$

Use the pumping lemma to **demonstrate** that L is not a regular language.

Problem 3 (CO3): Designing Context-Free Grammars (15 points)

$$L_1 = \{w \in \{\mathtt{a}, \mathtt{b}\}^* : w \text{ is a odd length palindrome}\}$$
$$L_2 = \{w \in \{\mathtt{a}, \mathtt{b}\}^* : \text{every second letter of } w \text{ is b}\}$$
$$L_3 = \{w \in \{0, 1\}^* : w \text{ contains exactly two 0s}\}$$
$$L_4 = \{w1\#w2 : w1 \in L2, w2 \in \{0, 1\}^* \text{and } |w1| = |w2|\}$$
$$L_5 = \{w1\#w2 : w1 \in L2, w2 \in L3 \text{ and } |w1| = |w2|\}$$

Now solve the following problems.

(a) **Give** a context-free grammar for the language L_1. (3 points)

(b) **Give** a context-free grammar for the language L_2. (3 points)

(c) **Give** a context-free grammar for the language L_3. (3 points)

(d) **Find** all strings $w \in L_4$ such that w ends with #1011 and has a length of 9. (1 point)

(e) **Give** a context-free grammar for the language L_4. [Recall: For a string w, $|w|$ denotes the length of w.] (3 points)

(f) **Give** a context-free grammar for the language L_5. (2 points)

Problem 4 (CO3): Derivations, Parse Trees and Ambiguity (10 points)

Let $\Sigma = \{0, 1\}$. Consider the following grammar over Σ.

$$S \to 0S1 \mid 1S0 \mid A$$
$$A \to 00A \mid 01A \mid 10A \mid 11A \mid \varepsilon$$

(a) **Give** a leftmost derivation for the string 01011001. (3 points)

(b) **Draw** the parse tree corresponding to the derivation you gave in (a). (2 points)

(c) **Demonstrate** that the given grammar is ambiguous by showing two more parse trees (apart from the one you already found in (b)) for the given string in (a). (4 points)

(d) How many four-letter strings will have exactly one parse tree in the given grammar? (1 point)

Problem 5 (CO3): Designing Pushdown Automata (10 points)

$$L_1 = \{w \in \{0, 1\}^* : w \text{ contains at most two 0s}\}$$
$$L_2 = \{w \in \{0, 1\}^* : w = 0^{2n}1^{3n} \text{ where } n \geq 0\}$$
$$L_3 = \{w\#x : w, x \in \{0, 1\}^* \text{ and } w^R \text{ is a substring of } x\}$$

(a) **Give** the state diagram of a pushdown automaton that recognizes L_1. (3 points)

(b) **Give** the state diagram of a pushdown automaton that recognizes L_2. (3 points)

(c) **Give** the state diagram of a pushdown automaton that recognizes L_3. [Recall: For a string w, w^R denotes w in reverse order.] (4 points)

Problem 6 (Bonus): Pumping Lemma (4 points)

Let $\Sigma = \{0, 1\}$. Consider the following language over Σ.

$$L = \{w \text{ is not a palindrome.}\}$$

Use the pumping lemma to **demonstrate** that L is not a regular language.

After you are done with the test, please indicate where you stand on the smiley face spectrum.